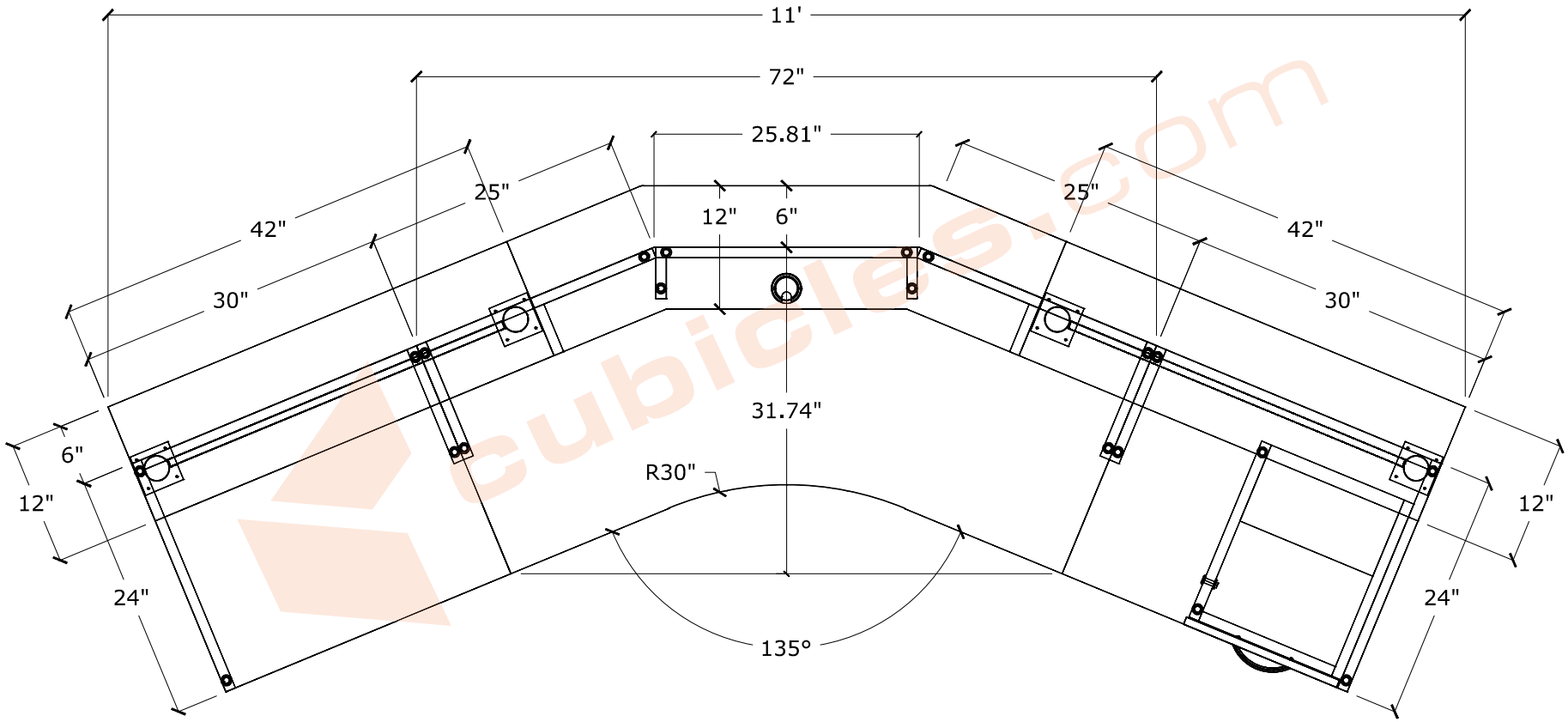2D LAYOUT